USER MANUAL

WLE522WA, WLE525WA,
WLE527WA, WLE533WA,
WLE535WA, WLE537WA,
WLE547WA, WLG503WA,
WLG505WA, WLG517WA

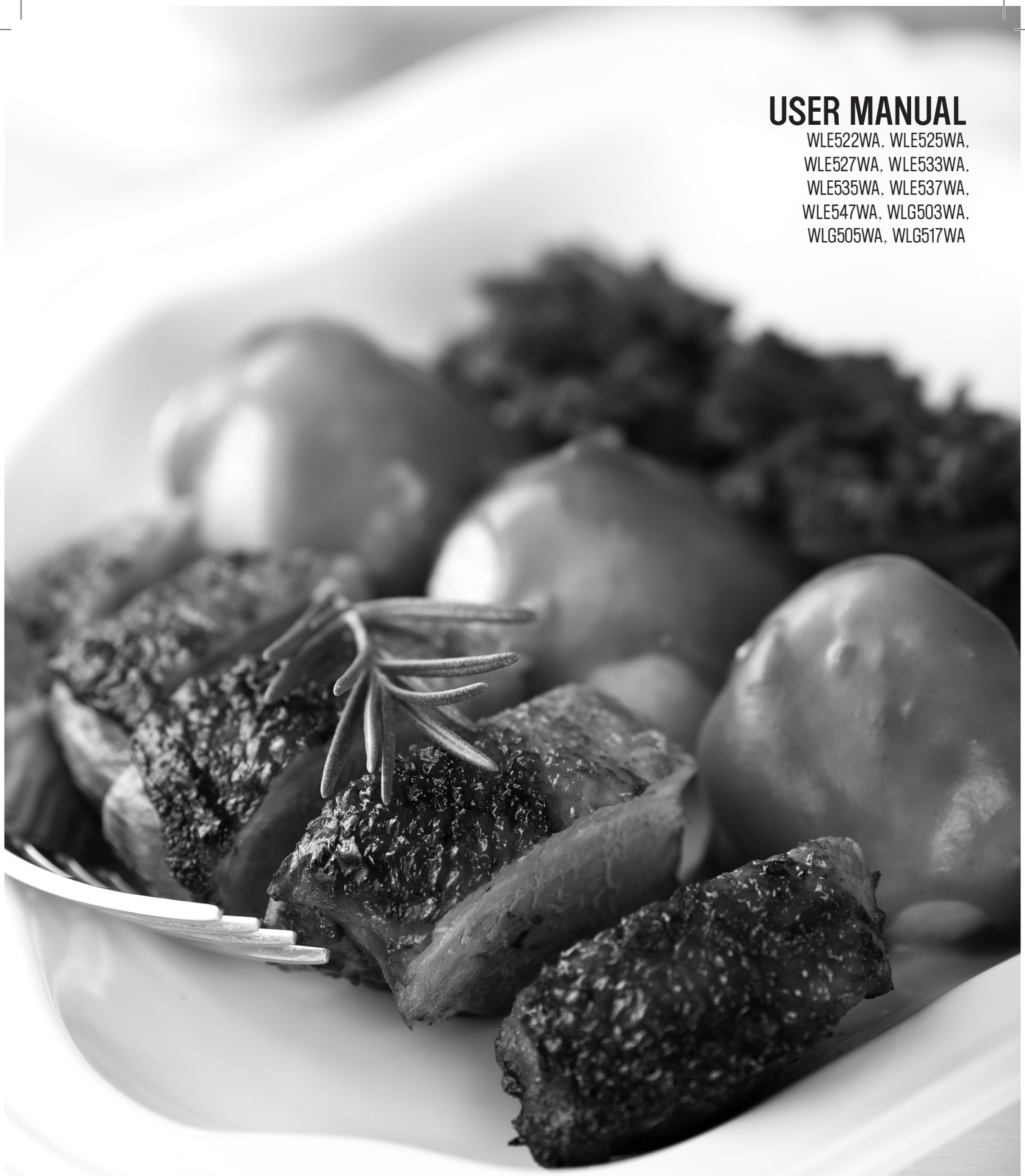

540mm UPRIGHT COOKING APPLIANCES

Westinghouse

made for modern families

CONGRATULATIONS

Congratulations and thank you for choosing our Westinghouse upright cooker. We are sure you will find your new appliance a pleasure to use and a great asset to your cooking. Before you use the appliance, we recommend that you read through the whole user manual which provides a description of the product and its functions. For future reference, please store this booklet in a safe place.

To avoid the risks that are always present when you use a gas appliance, it is important that the appliance is installed correctly and that you read the safety instructions carefully to avoid misuse and hazards.

CONDITIONS OF USE

This appliance is intended to be used in household and similar applications such as:

- Staff kitchen areas in shops, offices and other working environments
- Farm houses
- By clients in hotels, motels and other residential type environments
- Bed and breakfast type environments.

Record model and serial number here:

Model:.....

Serial number:.....

The symbols you will see in this booklet have these meanings:

WARNING

This symbol indicates information concerning your personal safety.

CAUTION

This symbol indicates information on how to avoid damaging the appliance.

TIPS AND INFORMATION

This symbol indicates tips and information about use of the appliance.

ENVIRONMENTAL TIPS

This symbol indicates tips and information about economical and ecological use of the appliance.

CONTENTS

Important safety instructions 3
Operating for the first time.....5
Installing your oven accessories.....6
Using the gas cooker 7
Using the electric cooker 9
3 button programmable clock.....10
General hints and tips 12
Cleaning the cooker 13
Get to know your oven.....16
Oven guide 17
Trouble shooting 18
Installation 20
Replacing the oven light 21
Service Fuse 23
Warranty.....31

TIPS AND INFORMATION

MPORTANT – CHECK FOR ANY DAMAGE OR MARKS

If you find the appliance is damaged or marked, you must report it within 7 days if you wish to claim for damage/ marks under the manufacturer's warranty. This does not affect your statutory rights.

ENVIRONMENTAL TIPS

INFORMATION ON DISPOSAL FOR USERS

- Most of the packing materials are recyclable. Please dispose of those materials through your local recycling depot or by placing them in appropriate collection containers.
- If you wish to discard this product, please contact your local authorities and ask for the correct method of disposal.

BEFORE MAKING A SERVICE CALL

1. Please read the user manual carefully.
2. Cooking variations are natural and to be expected. You should experiment with times, temperatures and recipes to obtain the best results to your own taste.
3. New appliances can have an odour during the first operation.
   - It is recommended to, 'run in', the oven before you cook. Run the oven at 180°C for 2 hours and ensure that the room is well ventilated.
   - For products with separate grill compartment, run the grill on full for 15 minute with the grill door open.
4. If you have purchased a model with a 3 button programmable clock, you will need to set the clock in order to begin using your oven.

IMPORTANT SAFETY INSTRUCTIONS

WARNING

TO AVOID AN ELECTRIC SHOCK OR FIRE

This appliance is NOT intended for use by persons (including children) with reduced physical, sensory or mental capability, or lack of experience and knowledge, unless they have been given supervision or instruction concerning use of the appliance by a person responsible for their safety.

WARNING – Accessible parts may become hot during use. To avoid burns, young children should be kept away.

Young children should be supervised to ensure they DO NOT play with this appliance.

DO NOT operate the hotplates with external timers or a separate remote control system.

During use this appliance becomes hot. Care should be taken to avoid touching hot external, internal surfaces and hot elements when in use. Use oven gloves.

This appliance must NOT be used as a space heater.

DO NOT install gas models in marine craft, caravans or mobile homes because these products are not fitted with a flame safeguard on each burner.

DO NOT install an after market lid or cover over this appliance.

DO NOT spray aerosols in the vicinity of this appliance while it is in operation.

DO NOT store flammable materials in the appliance storage drawer or near this appliance.

Ensure all specified vents, openings and airspaces are NOT blocked.

Install cooker, shelving and fittings in accordance with the Guide and Installation Instructions, to avoid accidents.

DO NOT operate the gas appliance if the smell of gas persists.

DO NOT MODIFY THIS APPLIANCE.

WARNING

GRILL WARNINGS

DO NOT leave grill on unattended.

Fat left on a grill dish is a fire hazard! Keep grill clean and turn off grill immediately after use.

If gas burner does not light in 8 seconds, allow one minute for gas to clear before trying again.

Placing thick portions of food under grill can be a fire hazard.

DO NOT cover the grill dish insert with foil.

CAUTION

Separate grill model: Grill with door open.

Grill in oven model: Grill with door closed.

WARNING

OVEN WARNINGS

DO NOT use the oven door as a shelf.

DO NOT push down on an open oven door.

If the gas oven does not light in 8 seconds, allow 1 minute for gas to clear before trying again

DO NOT line oven with foil or place anything on the bottom of the oven while baking, as trapped heat will crack or craze the floor of the oven cavity liner.

DO NOT use poly-unsaturated oils (vegetable oils) as this type of oil can cause black spots or deposits inside the oven. This residue is very difficult to remove.

WARNING

HOTPLATE AND BURNER WARNINGS

DO NOT allow pots to boil dry, as damage to the hotplate (and pan) may result.

DO NOT operate without a pot, fry pan etc on the hotplates.

DO NOT allow cookware to overhang the hotplate onto adjacent bench tops, this will cause scorching to the bench top surface.

DO NOT use large utensils that may become unstable.

Gas models: Ensure burner caps and crowns are in their correct position.

GENERAL APPLIANCE DESCRIPTION

Electric Separate Grill Oven depicted.

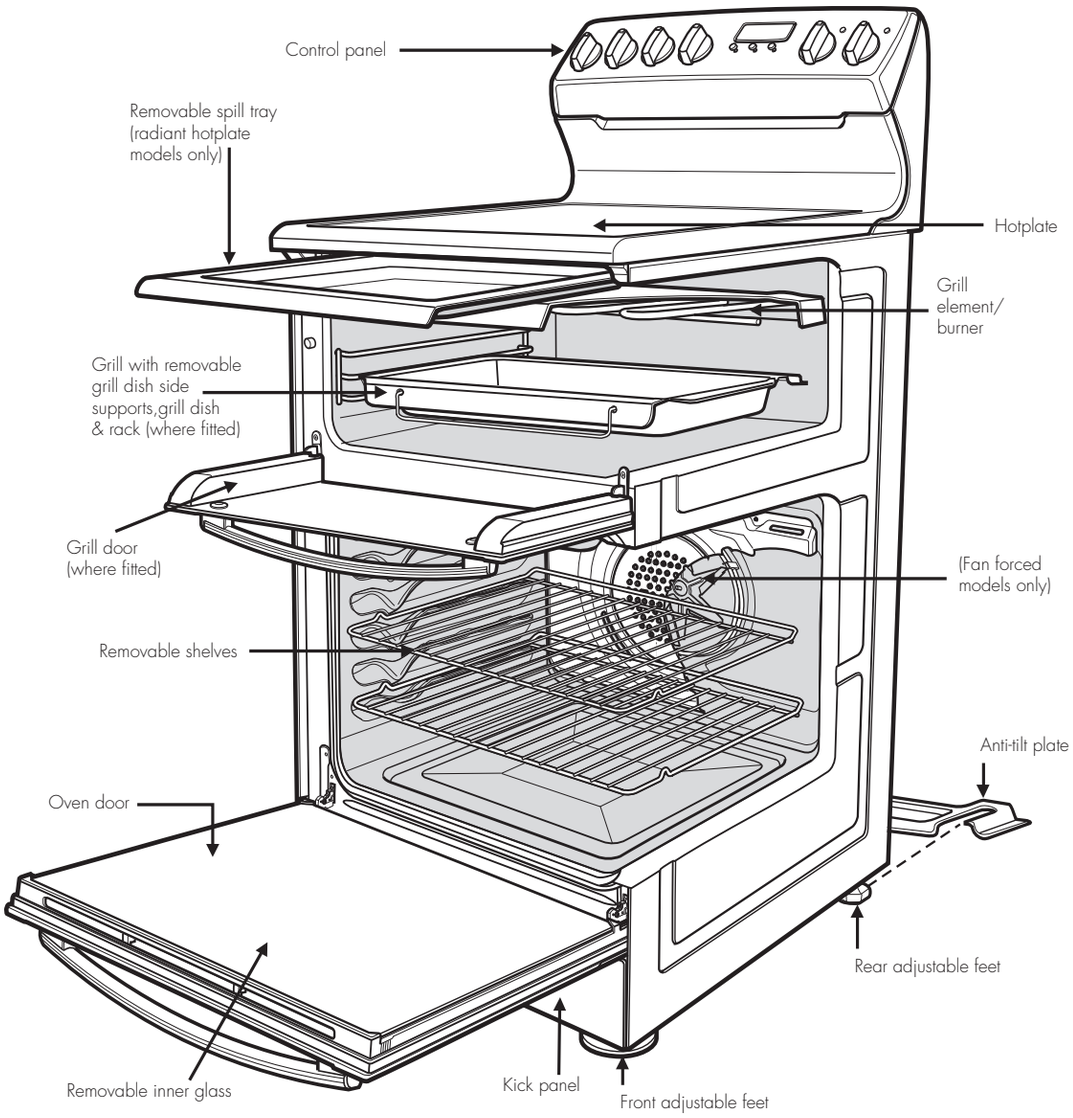

OPERATING FOR THE FIRST TIME

CHOOSING UTENSILS FOR ELECTRIC HOTPLATES

Refer to the diagram below.

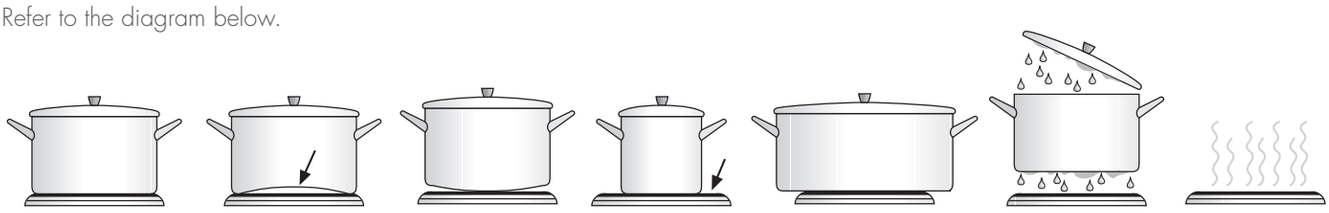

☑ ☒ (recessed base) ☒ (convex base) ☒ (undersize) ☒ (oversize) ☒ (moisture on hotplate) ☒ (no utensil)

CHOOSING UTENSILS FOR GAS HOTPLATES

Refer to the diagram below.

☑ ☒ (undersize) ☒ (oversize)

Do not use utensils which are too large or too small.

INSTALLATION AND SERVICE WARNING

⚠ WARNING

- Only an authorised person must install and service this appliance (Certificate of Compliance to be retained).
- In order to avoid a hazard, the installation instructions MUST be followed.
- In order to avoid the appliance tipping, the anti-tilt plate MUST be installed.
- Appliances requiring connection to 230 – 240V MUST be earthed.
- An authorised person should inspect this appliance every 5 years.
- This appliance must NOT be installed on a base, box or in a closed cupboard.
- If the electrical supply cord is damaged, a qualified person MUST replace the cord to avoid a hazard or void your warranty.

⚠ WARNING

Surrounding kitchen cabinets MUST WITHSTAND 85°C.

ⓘ BEFORE OPERATING FIRST TIME

1. Read all the Warning and Safety information.
2. Remove all internal boxes and bags from oven.
3. Clean out the oven interior with detergent and warm water and polish with a soft cloth. DO NOT close oven door until the oven is completely dry.

ⓘ SETTING THE TIME

4. If you have purchased a model fitted with a 3 button programmable timer, you must set the time of day before you can operate your appliance.

- After the appliance has been electrically connected "12.00" will be displayed and the"clock indicator" will flash.
- To set the time of day, press the – or + buttons. 5 seconds after the last change, the "clock" indicator will disappear, confirming the time has been set.

NOTE: The clock has a 24-hour display.

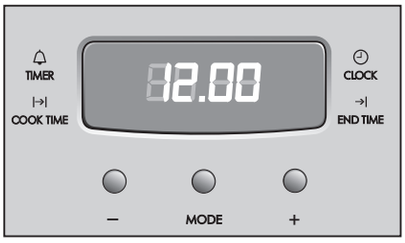

5. New appliances can have an odour during first operation. It is recommended to 'run in' the oven before you cook. Run the oven at 180°C for 2 hours and ensure that the room is well ventilated.
6. Turn grill on maximum for 15 minutes with grill doors open for separate grill models with 10mm of water in the bottom of the grill dish.
7. If your appliance is fitted with solid hotplates, turn heat setting to high for 3 minutes to fully harden the hotplate coating.

INSTALLING OVEN ACCESSORIES

FITTING OVEN SHELVES

1. Ensure shelf orientation is correct (refer to diagram below).
2. Slide oven shelves onto oven supports (side runners) at an angle until raised back of shelf is past the stop on oven supports (side runners).
3. Lower front of shelf and push in until stop is reached.
4. To remove oven shelves, withdraw to the stop and raise the front of shelf to clear the stop.

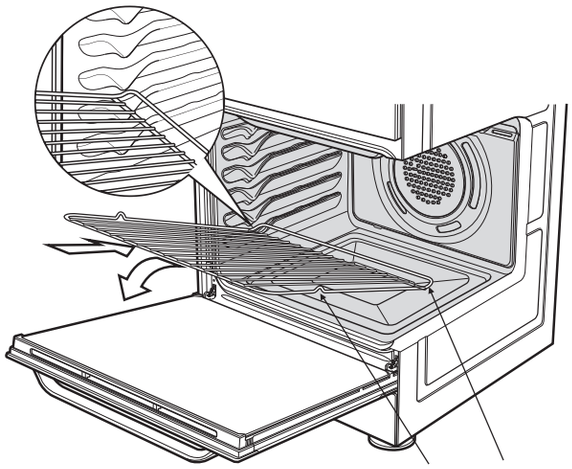

Note the orientation of the side and rear features

OVEN SHELF LOCATION

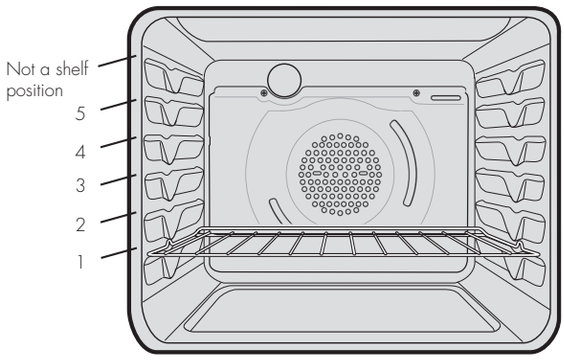

5 shelf positions

NOTE: the top ledge is not a shelf position.
There are no stops for shelf withdrawal.

ASSEMBLE GRILL TRAY HANDLE

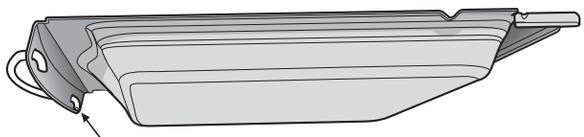

Assemble grill tray handle as shown

FITTING THE GRILL DISH SUPPORTS

- Insert the rear hook into the rear hole.
- Align the front peg to the front hole and push in firmly.

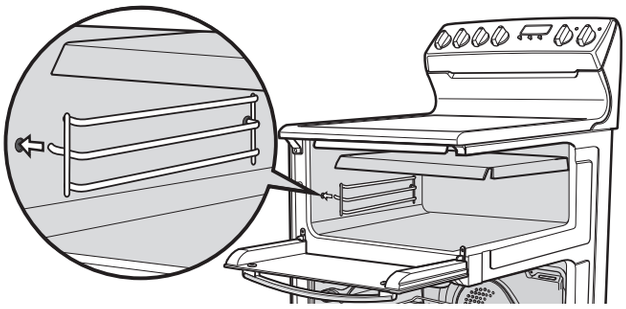

FITTING THE GRILL DISH

SEPARATE GRILL

Ensure rear of the dish is engaged with the side support before sliding backwards. To remove, simply pull forwards and upwards.

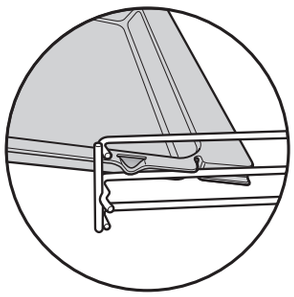

Engagement of rear of dish

GRILL IN OVEN

(refer to Fitting Oven Shelves)
The grill dish with wire insert can be used in any of the two upper height positions (shelf positions 4 and 5) between the runners.

NOTE: You must remove the grill dish when baking in the oven.

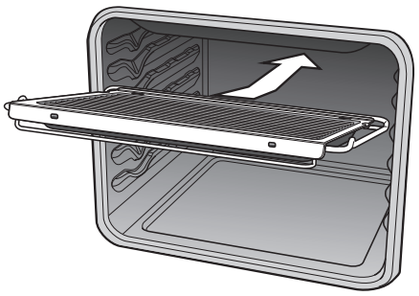

Grill dish insertion

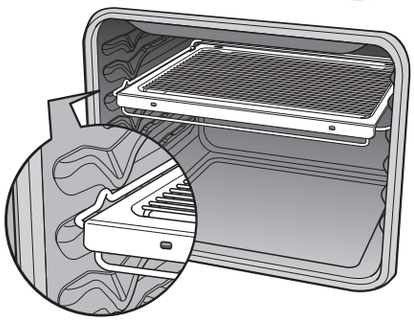

Grill dish final position

USING THE GAS COOKER

GAS OVEN FEATURES AND DESCRIPTIONS

WLG503WA

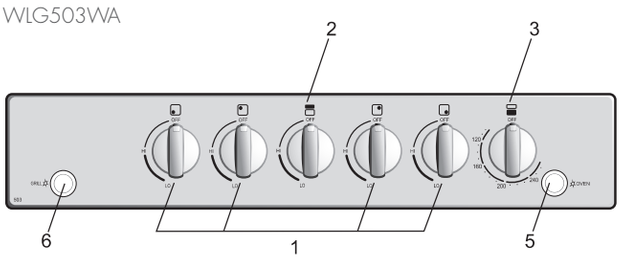

WLG505WA

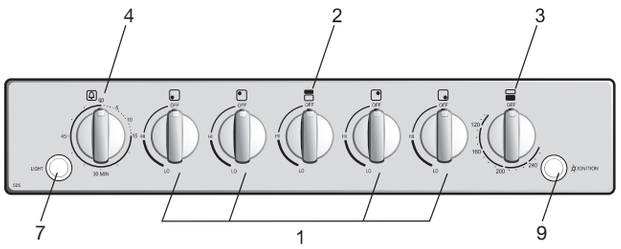

WLG517WA

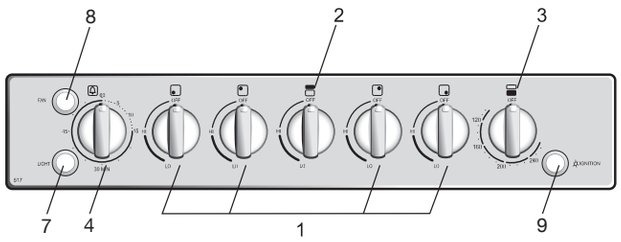

1. Burner Control Knob – sets burner temperature.
2. Grill Control Knob – sets grilling temperature.
3. Oven Control Knob – sets oven temperature.
4. Timer 60 Minute (where fitted) – sets reminder time. When timer returns to zero, timer gives a short ring.

   NOTE: for any time below 15 minutes, turn knob past 15 minutes, then back to required time setting.
5. Oven Piezo Igniter – ignites oven burner when appropriate control knobs are set.
6. Grill Piezo Igniter – ignites grill burner.
7. Light Switch (where fitted) – turns oven light on/off.
8. Fan Switch (where fitted) – turns fan on/off.
9. Electronic Ignition Switch – ignites hotplate burners, grill burner and oven burner.

GAS OVEN CONVENTIONAL BAKING

The heat comes from the bottom oven burner. The temperature at the centre of oven is the same temperature set on the control knob. When oven is used on this mode, shelf position is important, (refer to 'Oven Guide'). As hot air naturally rises, the upper half of the oven will be approximately 10°C higher and the lower half approximately 10°C cooler than the set temperature.

For best results from your gas oven use dark coloured trays and baking dishes on a single shelf. Refer to 'General Hints and Tips' section for more information.

For best baking results preheat oven for 30 minutes.

GAS OVEN FAN FORCED BAKING

Fan Forced baking generally requires lower temperatures than conventional baking. Most recipe books, unless stated, are for conventional oven temperatures. It is recommended when using the fan forced mode to reduce the oven temperature by 10°C.

In a fan forced gas oven the heat comes from the bottom burner. Hot air is distributed by an electrically operated fan located behind the rear wall of the compartment, providing an even temperature on all shelf levels. This means batches of the same food can be baked using multiple shelf positions simultaneously.

Fan Forced operation can be used for single shelf baking with equal success.

For best baking results preheat oven for 30 minutes.

COOKWARE

For best baking results with gas ovens, dark coloured trays and baking dishes are recommended.

USING THE GAS COOKER

GAS HOTPLATE

Ensure burner caps, crowns and trivets are properly assembled. For wok ONLY use the trivet and burner dedicated for wok cooking.

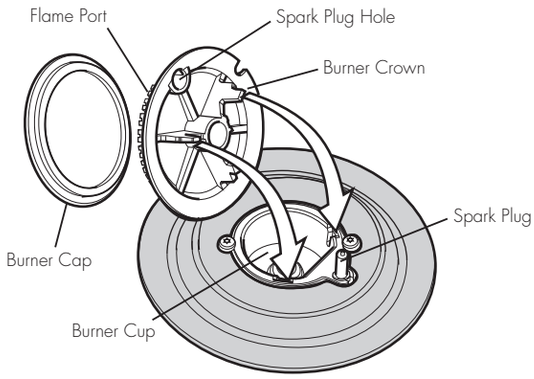

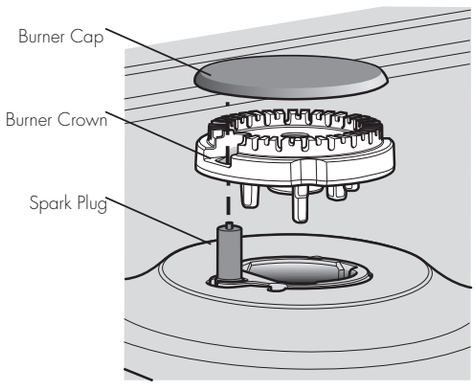

GAS OVEN BURNER FLAME

From a cold start the oven burner flame will be higher on the left hand-side. After reaching the set temperature, the flame will become even. This does not affect cooking results.

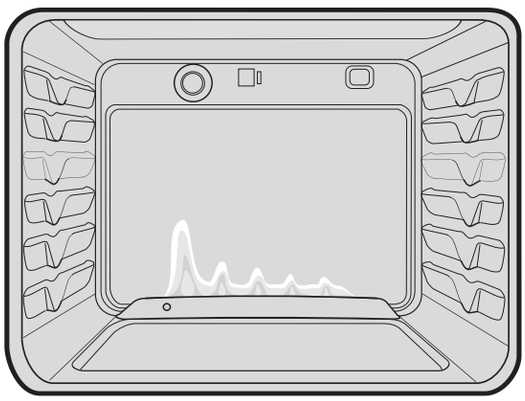

LIGHTING GAS HOTPLATE, GRILL AND OVEN

HOTPLATE IGNITION – (ELECTRONIC)

Turn appropriate Burner Control Knob onto maximum and at the same time press the Electronic Ignition Switch.

HOTPLATE IGNITION – (MANUAL)

Turn control knob to the maximum. At the same time, hold hand-ignitor next to the burner and ignite (Hand-ignitors not supplied).

GRILL IGNITION – ELECTRONIC

Turn Grill Control Knob onto maximum and at the same time press Electronic Ignition Switch.

GRILL IGNITION – PIEZO

Turn the Grill Control Knob on to Maximum and at the same time press the grill igniter button (several times if necessary) It will make a loud 'clack' noise as the piezo mechanism creates a spark.

GRILL – IN OVEN

Grill is electric and is operated by control knob only.

OVEN IGNITION – ELECTRONIC

Push and hold Oven Control Knob onto desired temperature and at the same time press the Electronic Ignition Switch.
Hold control knob in for 15 seconds after ignition.

OVEN IGNITION – PIEZO

With the left hand push and hold the Oven Control Knob in and turn it a quarter of the way anti-clockwise. Keep the oven Control Knob pushed in firmly and at the same time push the Oven Piezo Igniter button on the right hand side of the control panel (several times if necessary). It will make a loud 'clack' noise as the Piezo mechanism creates a spark.
Hold control knob in for 15 seconds after ignition.

⚠ CAUTION

If hotplates, grill or oven do not light within 15 seconds, allow 1 minute for gas to clear before trying again.

USING THE ELECTRIC COOKER

ELECTRIC OVEN FEATURES AND DESCRIPTIONS

GRILL IN OVEN MODELS

WLE522WA

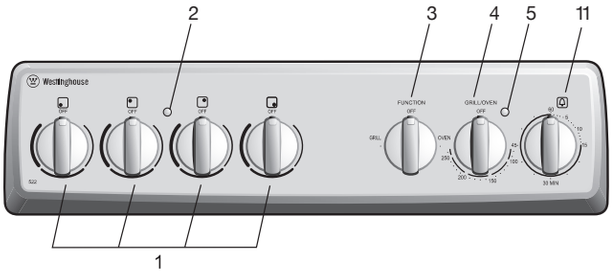

SEPARATE GRILL MODELS – CONVENTIONAL OVEN

WLE525WA/WLE533WA/WLE535WA

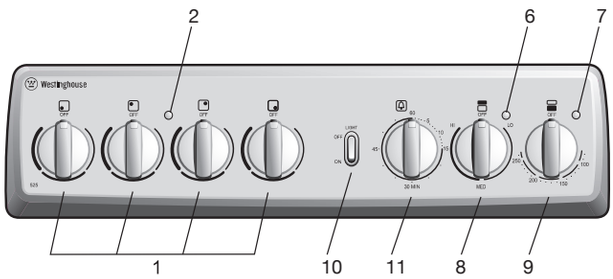

SEPARATE GRILL MODELS – FAN-FORCED OVEN

WLE527WA/WLE537WA/WLE547WA

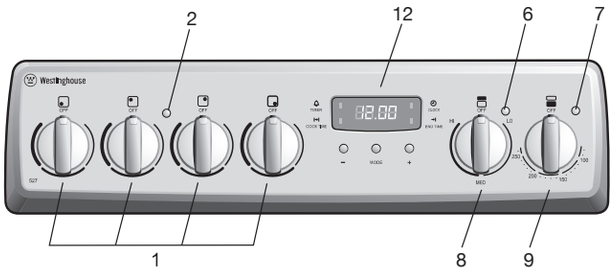

1. Radiant/Solid/Ceramic Hotplate Control Knob – sets hotplate temperature.
2. Hotplate Indicator Light – comes on when a hotplate control knob is operated.
3. Grill/Oven Function Control Knob – sets grill or oven function.
4. Grill/Oven Control knob – sets grill/oven temperature.
5. Grill/Oven Indicator Light – comes on when grill/oven temperature knob is operated. Oven indicator light cycles on and off when temperature is reached.
6. Grill Indicator Light – comes on when grill control knob is operated.
7. Oven Indicator Light – comes on when oven control knob is operated.
8. Grill Control Knob – sets grilling temperature.
9. Oven Control Knob – sets oven temperature.
10. Oven Light Switch – turns oven light on/off.
11. Timer 60 Minute – (where fitted) sets reminder time. – When timer returns to zero, timer gives a short ring. *NOTE: For any time below 15 minutes, turn knob past 15 minutes, then back to required time setting.*
12. Programmable Clock – sets baking/grilling reminder times – sets automatic cooking duration and stop time. *NOTE: Clock time must be set before operating oven.*

USING THE ELECTRIC COOKER

RADIANT HOTPLATES

The high-speed radiant hotplates heat rapidly from a cold start. This saves power.

The hotplates have a tray underneath the hob which collects spilt liquids. This tray can be removed by sliding it out through the open grill door (except model WLE522WA).

Radiant elements also swivel for easy cleaning.

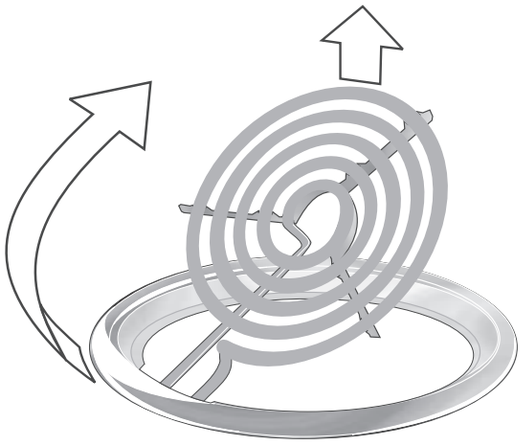

SOLID HOTPLATES

The strong solid-cast hotplates give wide contact for fast efficient cooking.

Hotplates are sealed to prevent spilt liquids from running under the hotplates.

If present, the red dot in the centre of hotplate changes colour when heated.

When necessary, apply a coating of hotplate protector to solid plates to maintain them.

CERAMIC HOTPLATES

WARNING

If the surface is cracked, switch off the appliance to avoid the possibility of electric shock.

- The ceramic cooktop is made from ceramic glass, a tough, durable material that withstands heating and cooling without breaking. However, it must be noted that as it is glass, it may break, and must therefore be treated with care. Should you have any questions about the glass in your new appliance, please contact the service centre by dialling 13 13 49.
- The smooth glass surface has a pattern to show where the elements under the glass are located.
- When a hotplate is on, the hot surface warning light will come on. After switching off, this light will continue to glow until the temperature of the hotplate drops below 60°C.

ELECTRIC OVEN CONVENTIONAL BAKING

Heat comes from two elements, one above and one below the food. The bottom element is hidden below the floor of the oven. As hot air rises naturally, the upper part of the oven will be approximately 10°C higher than the set temperature and the lower part of the oven approximately 10°C cooler.

For grill in oven models, the grill dish must be removed when baking.

For best baking results, preheat oven for 30 minutes, also refer to 'General Hints and Tips".

ELECTRIC OVEN FAN FORCED BAKING

In a fan forced electric oven the heat comes from the rear oven element. Hot air is distributed by a fan behind the rear wall of the compartment, providing an even temperature on all shelf levels. This means, batches of food can be baked using multiple shelf positions simultaneously.

Fan forced operation can be used for single food baking with equal success.

Fan Forced baking generally requires lower temperatures than conventional baking. Most recipe books, unless stated, are typically for conventional oven temperatures. It is recommended that when using the fan forced mode, reduce the oven temperature by 10 degrees (refer to 'Oven Guide').

For best baking results preheat oven for 30 minutes.

COOKWARE

For best cooking results with electric ovens, silver or shiny trays are recommended.

NOTE: Three button timer models MUST have clock set after a power outage to operate oven.

3 BUTTON PROGRAMMABLE CLOCK

Your oven is equipped with a 3 button timer that has the following features:

- Timer 🔔 - you can set a countdown time that will beep when the set time has elapsed.
- Cook time |→| - you can set cooking duration. A timer will count down the preset cooking time, beep when the time has elapsed and turn the appliance off.
- End time →| - instead of setting a cooking duration you can set a cooking finish time. When the finish time has been reached the timer will beep and turn the appliance off.
- Delayed start cooking time - you can combine the cooking time and end cooking time to switch oven on and off at a specific time during the day.

SELECTING THE TIMER

- Press the MODE button until the timer 'indicator' begins flashing.
- Set the countdown time you want by using the − and + buttons. 5 seconds after the last change the timer 'indicator' will stop flashing and the countdown will start in minutes.
- To stop the beeper, press any button.
- Maximum countdown time is 2hrs 30mins.

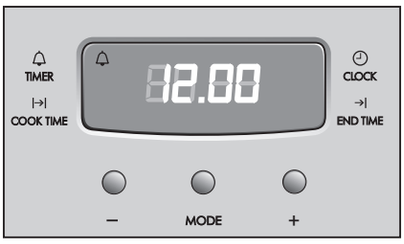

SETTING THE COOKING DURATION |→|

- Select the desired oven function and temperature.
- The oven indicator light will glow and the heating source will come on.
- Press the MODE button until the cook time |→| 'indicator' begins flashing.
- Set the cooking duration you want by using the − and + buttons. Five seconds after the last change the cook time 'indicator' will stop flashing, and the time of day will be displayed.

NOTE: Remember to add pre-heating time if necessary.

SETTING THE COOKING END TIME →|

1. Check that the clock displays the correct time of day.
2. Select the desired oven function and temperature. The oven indicator light will glow and the heating source will come on.
3. Press MODE button until the end time →| 'indicator' begins flashing.
4. Enter the time of day you want to finish cooking by pressing − or + buttons. Five seconds after the last change, the end time 'indicator' will stop flashing and the current time of day will be displayed.

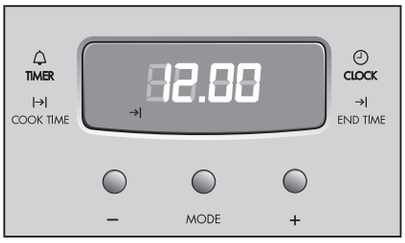

SETTING THE DELAYED START COOKING TIME

- Set the cook time |→| and end time →| as described in the previous sections.
- Once both the cook time and end time have been set, the cook time and the end time 'indicators' will stop flashing and the current time of day will be displayed.
- To stop the beeper, press any button.

3 BUTTON PROGRAMMABLE CLOCK

TO CHECK OR CANCEL SETTINGS

- To check your settings, press the MODE button until the indicator you want is flashing.
- To cancel "delayed start" press the mode button until a light flashes next to "end time" →|. Press and hold the − button until the clock no longer reverses (you will hear a beep). If you have left the temperature and function knobs at a setting the oven will start once the "end time"→| light stops flashing.
- To cancel "auto shut off" press the mode button until a light flashes next to "cook time" |→|. Press and hold the button until the clock no longer reverses (at 0:00 you will hear a beep). This automatically cancels "delayed start". If you have left the temperature and function knobs at a setting, the oven will start once the "cook time" |→| light stops flashing. Because you have cancelled "auto off" the oven will continue to heat until you manually turn it off.

ON COMPLETION OF COOKING

- The heat source will turn off, the timer will beep and the end time and/or cook time 'indicators' will flash.
- Even though the heating element turns off the oven will still retain substantial heat. This will continue to cook the food until it is removed or the oven cools down. If you do not plan on being present when the oven turns off, you should take this extra heating time into account.
- Turn the function and temperature controls to the off position.
- Press any button to stop the timer beeping.

ADJUSTING THE CLOCK

- Press the MODE button until the clock 'indicator' begins flashing.
- Press the − or + buttons to change the time of day. 5 seconds after the last change, the clock 'indicator' will disappear, confirming the time has been adjusted.

GENERAL HINTS AND TIPS

CAUTION

USING THE GRILL

Separate Grill	Grill with door open. Grill dish must be fully inserted. (Refer to SEPARATE GRILL DISH INSERTION)
Grill In Oven	Grill with door closed.

GENERAL HINTS

For best baking results preheat oven for 30 minutes.

The material and finish of baking trays and dishes used will affect the way foods are baked, especially base browning.

- Enamelware, anodised aluminium, dark bakeware or non-stick interiors and coloured exteriors will assist in maintaining or reducing the baking time and increase base browning.
- Ovenproof glassware or ceramics are poor conductors of heat. The shiny surface of aluminium or polished steel utensils and trays also reflects the heat rather then passing it through to the food being baked.
- Always place dishes in the centre of the shelf to ensure even browning.
- Stand casserole dishes on a baking tray to prevent food from spilling onto the base of the oven.
- Use ovenproof cookware, which will withstand temperatures of 250°C.
- Use shallow casserole dishes in preference to deeper ones as this shortens cooking time in the oven.

CAUTION

- DO NOT place dishes, trays or baking pans directly on the oven base as they become very hot and will crack and craze the oven liner.
- DO NOT use baking trays larger than 30 x 35cm (12 x 14 inches) as they will restrict the circulation of the heat and may affect cooking performance of the oven.

CONVENTIONAL OVEN

- The shelf position is critical. The temperature in centre of the oven is the temperature shown on the oven control knob. Single shelf baking gives optimal cooking results.
- DO NOT place baking trays, oven dishes or foil directly on the base of oven, as trapped heat will crack and craze the floor of the oven liner.

FAN FORCED

- Make sure shelves are evenly spaced.
- When baking more than one dish in fan forced oven, place dishes centrally on shelves rather than several dishes on one shelf.
- When the oven is full you may need to allow a slightly longer baking time.
- When using different size trays or cooking different types of food, cooking times may vary for each dish.

CAUTION

- DO NOT place baking trays and oven dishes directly against the grid covering the fan at the back of the oven.
- DO NOT place oven dishes directly on the oven base.

TIPS AND INFORMATION

CONDENSATION AND STEAM

- During cooking steam may be produced which can be released when opening the oven door. This is quite normal.
- If there is any build-up of condensation on the oven door it is recommended that it be carefully wiped away either during or after cooking.

WARNING

Always stand back from heated oven when opening oven door to allow any build-up of steam or heat to release.

SEPARATE GRILL DISH INSERTION

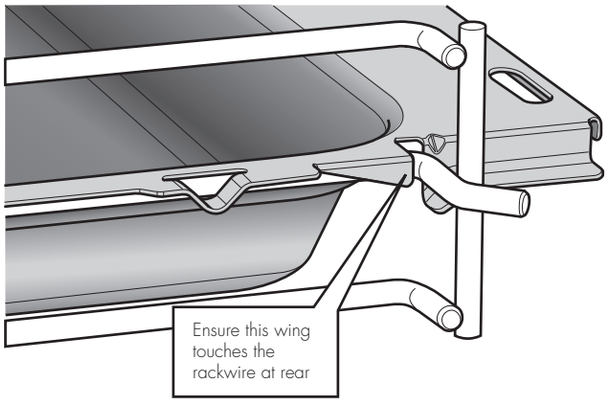

WARNING

Door glass is a tough and durable material designed to withstand heating and cooling without breaking. However it must be remembered that it is glass and may break, therefore must be treated with care. If you have any questions about the glass in the oven please contact the Service centre on 13 13 49.

CLEANING THE COOKER

Ovens and hotplates are made from steel and enamel. Do not use abrasives and harsh scourers as they may scratch the surface.

ENAMEL

- Keep enamel clean by wiping it with a soft cloth dipped in warm soapy water.
- Rub difficult stains with a nylon scourer or cream powder cleanser.
- DO NOT use abrasive cleaners, powder cleaners, steel wool or wax polishes.
- If you use an oven cleaner, follow the instructions on the product carefully.

STAINLESS STEEL

- All grades of stainless steel can stain, discolour or becomes greasy. Clean the cooker regularly, using the procedures outlined below, to maintain the function and appearance of your appliance.
- Care must be taken when wiping exposed stainless steel edges as they can be sharp.
- The front frame around the oven can be cleaned with stainless steel cleaners if it comes soiled or discoloured.
- A suitable cleaner can be purchased from Electrolux Customer Care Centres.
- Always clean the stainless steel in the direction of the grain. Going against the grain may scratch the surface.

OVEN SHELVES

- Chrome shelves: use detergent and hot water. If very dirty use a non-abrasive nylon scourer.

OVEN – GRILL DISH AND INSERT

- After every use and while still warm, wash pan and grill with warm soapy water and a suitable oven cleaner. Rinse and dry before replacing in position.

OVEN

- Use detergent, warm water (and household cloudy ammonia if necessary) and a soft cloth. Dry thoroughly.
- Remove shelves when the cleaning oven.
- If there is a build-up of grease use a suitable oven cleaner, following the instructions on the cleaning product carefully. Heat oven to 110°C and turn oven off when 110°C is reached. Leave over-night. The fumes will loosen stubborn grease and stains. Remove bowl, wash with hot, soapy water and dry well before closing oven door again. Ensure oven is throroughly rinsed and dried before subsequent use.

⚠ CAUTION

- DO NOT remove the oven door.

CERAMIC HOTPLATES

Remove all spilt food with a razor blade scraper while the hotplate is still warm – NOT HOT.

- If aluminium foil, plastic items or foods with a high sugar content melt onto glass, use a razor blade scraper to remove immediately before the hotplate has cooled, otherwise pitting of the surface may occur. High sugar content foods include jam, fruit, carrots, tomatoes and peas.
- When the ceramic hotplate has cooled, wipe clean with dishwashing detergent and a damp cloth.

NOTE: DO NOT use abrasive sponges or scourers, oven sprays or stain removers on ceramic hotplates. These may damage, scratch or stain the ceramic cooktop. any pitting, staining or scratching WILL NOT be covered by warranty.

SOLID HOTPLATES

Solid hotplates are fitted with stainless steel trim rings, which after initial use, change colour to light brown. This is a normal characteristic of stainless steel and will not affect the operation or performance of your hotplates.

- Clean off any spillage after hotplate has cooled down.
- At regular intervals, clean hotplate with a nylon scouring pad and soapy water. Wipe clean then warm hotplate for 30 seconds to dry the surface.
- Apply 'hotplate protector'. Set hotplate on high for 3 minutes to allow coating to harden.

RADIANT HOTPLATES

These plates are self cleaning. Any liquid which boils over will burn to ash and can be wiped off when the hotplate has cooled. To clean the trim rings, lift front of element and remove, then wash in warm, soapy water.

To clean any spillage that falls through the element, remove the spillage tray and wash in warm soapy water.

GAS BURNERS

- Flame port blockages should be removed with a small metal cake skewer or nylon brush.
- Clean dirty spark plugs very gently with a nylon scourer. Do not use steel wool. Do not bend spark plug as it may break.
- If the caps, crowns and cups are heavily soiled, use a non-abrasive cleaning compound.
- Do not clean these parts with abrasive or caustic type cleaners, or clean in a dishwasher as they will be damaged.

GENERAL HINTS AND TIPS

CLEANING THE OVEN DOOR

Cool air circulates through the door to lower the surface temperature on the outside of the oven door.

CAUTION

- Do not remove the outer oven door. This product has a removable inner glass insert for ease of cleaning.

TO REMOVE THE INNER DOOR GLASS FOR CLEANING

- Open the door fully to access the hinges then rotate the "stirrups" on both hinges fully towards the door.

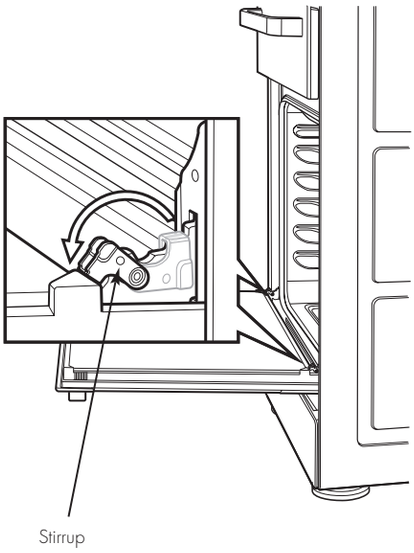

- Slowly close the door until it stops against the 'stirrups'.

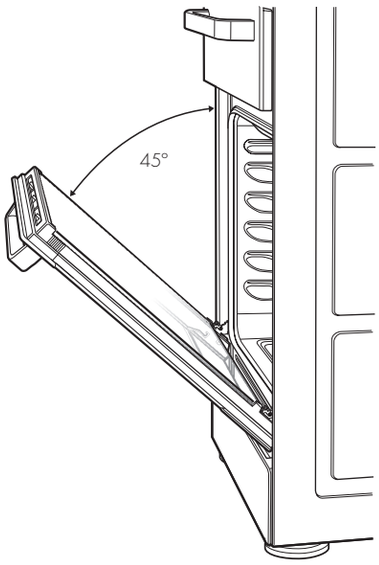

- To remove the top trim, press the ribbed release clips at each end and lift top trim away from the door.

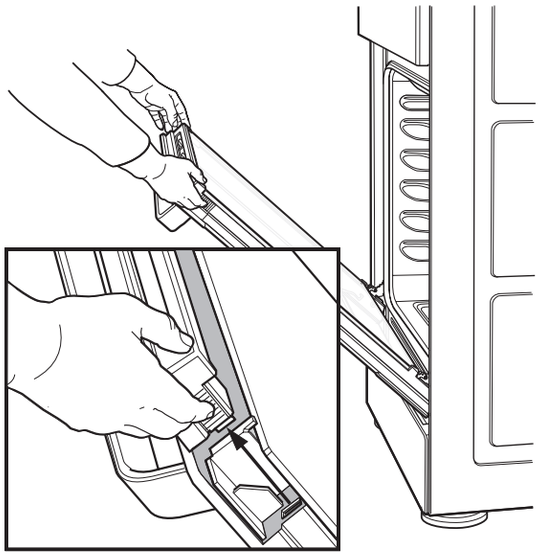

- Using both hands, gently remove the inner glass by sliding out and lifting away from the door.

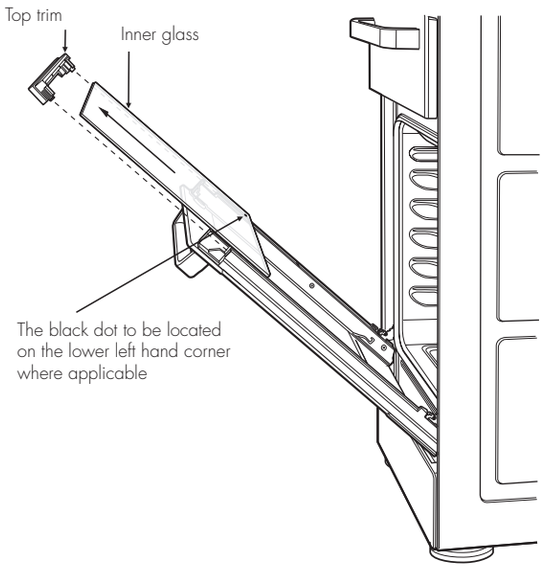

- Hand wash only with a soft cloth and warm soapy water. When dry, polish with a soft cloth and ensure the glass is dry before re-assembly.
- Wipe inner and outer glass gently with detergent and warm water.
- Wipe clean and dry thoroughly.

RE-ASSEMBLING THE OVEN DOOR INNER GLASS

- Replace the top trim ensuring the clips snap back into position.
- Fully open the door, rotate the stirrups back to their original position and close the door.
- When replacing the door inner glass, make sure the black dot it positioned as shown in the image (where applicable).

⚠ WARNING

- DO NOT use the oven without the inner door glass fitted.
- DO NOT use harsh abrasives on glass as this may damage the glass.
- DO NOT place glass in dishwasher.

SAFETY WARNINGS ABOUT CLEANING

⚠ WARNING

- ALWAYS make sure that the cooker is turned off before cleaning.

⚠ CAUTION

- ALWAYS clean cooker immediately after use.
- DO NOT use steam cleaners. These may cause moisture build-up, especially in the glass door.
- DO NOT use caustic based cleaners or harsh abrasives. These will damage your oven.

DOOR GLASS

- DO NOT use harsh abrasive cleaners or sharp metal scrapers to clean glass since they can scratch the surface, which may result in shattering of the glass.

GETTING TO KNOW YOUR OVEN

GETTING TO KNOW YOUR NEW OVEN WITH THIS SIMPLE 'TEST CAKE'

When baking, it is normal to experience some slight variation in temperature throughout the oven, resulting in minor differences in colour of the items being baked. You may need to rotate items whilst cooking to ensure an even colour.

SIMPLE 'TEST CAKE'

125g butter, softened to room temperature

1 cup caster sugar

1 teaspoon pure vanilla essence

4 large eggs

2 cups self-raising flour

pinch of salt

4 tablespoons (80ml) full-cream milk

Method:

1. Butter base and sides of two, 20cm straight-sided round or square cake pans. Then line the base with grease proof paper or baking paper.
2. Preheat oven to moderate 180°C (170°C fan forced) for 30 minutes and ensure oven shelf is in position 2 of the oven.
3. Cream softened butter and sugar until light in colour.
4. Add vanilla essence.
5. Add eggs one at a time, beating well after each addition.
6. Sift flour and salt into the mixture and beat until well combined.
7. Add milk and beat or stir to combine.
8. Spoon mixture equally between prepared cake pans.
9. Bake in preheated oven, position 2 for about 25 to 35 minutes. Tip: Insert a fine cake skewer into the cake mix. If it comes out clean, or if the edges of the cake have come away slightly from the sides of the cake pan, the cake is ready.
10. Remove from oven and place on wire cake rack and rest for 5 minutes before removing from cake pans. Cool completely.

To Serve: sandwich together with your favourite jam or conserve, and dust top with pure icing sugar.

NOTE: if desired, substitute butter for either margarine or olive oil spread.

Recipe is based on the Australian standard metric 250mL cup and 20ml tablespoon sets.

OVEN GUIDE

The following is intended as a guide. Cooking variation is natural and to be expected. You should experiment with times, temperatures and recipes to obtain the best results to your own taste. Get to know your oven before making a service call. Where the gas models vary from the electric models, details for gas cooking is shown in brackets. For best results when baking, preheat your oven for 30 minutes.

FOOD	CONVENTIONAL OVEN		FAN FORCED OVEN		TIME IN MINUTES
	Temperature °C	Oven shelf position*	Temperature °C	Oven shelf position*	
Plain or fruit scones	220	2 (3)	210	Any	10 –15
Rolled biscuits	170 (180)	2	150 (170)	Any	10 –15
Spooned biscuits	190	2	180	Any	12 –15
Shortbread biscuits	160	1 or 2	150	Any	30 – 35
Hard individual meringues	110	2	100	Any	90
Soft individual meringues	180	2	165	Any	15 – 20
Pavlova – 6 eggs	110 (120)	1	100	Any	75
Patty cakes	190	2	180	Any	15 – 20
Sponge – 4 eggs	180	2	170	Any	20 – 30
Plain butter cake	180	2	170	Any	25 – 40
Rich fruit cake	140 (150)	2	130	Any	180
Shortcrust cornish pasty#	200 (200/180)	2	180 (180/160)	Any	40 – 45 (10/35)
Shortcrust custard tart	200/180 (220/180)	1(3)	190/170 (200/180)	Any	20 – 30 (10/25)
Cream puffs	210	2	200	Any	25 – 30
Yeast bread	210	1	200	Any	25 – 30
Pizza	220	2	220	Any	15 – 25

* Shelf position is counted from the bottom shelf up. Bottom shelf position is 1.

Turn down temperatures shown.

MEAT/POULTRY/FISH		RECOMMENDED TEMPERATURE °C	MINUTES PER KILOGRAM
Beef	– Rare	200	35 - 40
	– Medium	200	45 - 50
	– Well done	200	55 - 60
Lamb	– Medium	200	40
	– Well done	200	60
Veal		180	60
Pork		200	60
Chicken		180 - 200	45 – 50
Duck		180 - 200	60 – 70
Turkey		180	40 – 45 (less than10kg) 35 – 40 (more than10kg)
Fish		180	20

TROUBLE SHOOTING

PROBLEM	CAUSES	WHAT TO DO
Uneven cooking	Incorrect shelf position	Select shelf that puts food in centre of oven
	Oven tray too large	Try other trays or dishes
	Trays not in centre	Put trays in centre
	Air flow in oven uneven	Rotate food during cooking
	Grill tray affecting thermostat	Remove grill tray from oven on bake modes
Baked products too brown on top	Oven not preheated	Preheat the oven
	Baking tins too large for recipe	Use correct size tins
	Baking tins not evenly spaced	Stagger baking tins at least 3cm between tins and the oven walls
	Products not evenly sized or spaced on trays	Make into same size and shape and spread evenly over trays
Baked products too brown on bottom	Baking tins too large	Use correct size tins
	Baking tins are dark metal or glass	Change to shiny, light tins or lower the temperature by 10°C
	Food is positioned too low in oven	Cook one shelf higher
	Oven door opened too frequently during baking	Don't open the oven door until at least half the cooking time has passed
	Baking temperature too high	Lower the temperature
	Grill tray affecting thermostat	Remove grill tray from oven on bake modes
Cakes have a cracked thick crust	Baking temperature too high	Lower the temperature
	Food is positioned too low in oven	Cook one shelf higher
	Cake batter over mixed	Mix just long enough to combine the ingredients
	Baking tin too deep	Check size of tin and use recommended size
	Baking tins dark	Change to shiny light tins
Baked products are pale, flat and undercooked	Baking temperature too low	Raise the temperature
	Food is positioned too low in oven	Cook one shelf higher
	Baking time too short	Increase cooking time
	Incorrect baking tin size	Use correct size tin
Cakes fallen in centre	Baking temperature too low	Raise the temperature
	Baking time too short	Increase cooking time
	Proportions of ingredients incorrect for recipe	Check recipe
	Opening door too early during baking	Do not open door until the last quarter of cooking time
Roast meat and potatoes not brown in fan oven	Poor hot air circulation	Elevate food onto a rack to allow air circulation
	Grill tray affecting thermostat	Remove grill tray from oven on bake modes
Juices running out of meat		Do not pierce meat with fork, turn with tongs
Grilled meats overcooked on outside and raw in the centre		Grill at lower insert position
Grilled chops and steaks curling		Cut into fat every 2cm (¾")
Excess grill smoke	Build-up of fats in grill	Clean grill

TROUBLE SHOOTING

If you have a problem with your appliance check the following before you ring the service line.

PROBLEM	WHAT TO DO
Operational problems ie: Oven, grill or hob not working	Check the electricity is turned on
	Check your fuses. If the fuse continues to blow, call the Service Centre
	Check the circuit breaker
	Ensure correct knob is turned
	Gas only – Dry or clean ignition electrodes
	Gas only – Make sure flame ports and ignition areas are clean and dry
	Gas only – Check gas supply is on
	Gas only – Ensure cap/crown correctly fitted.
	Replace or tighten light globes (where fitted)
Heat up problems	Oven not pre-heated – Pre-heat oven for 30 minutes
	Check oven door is closed properly
	Remove foil or trays from bottom of oven
	Change set oven temperature
	Preheat your oven/grill before you put the food in to be cooked
Unit smoking odours	New appliances can have an odour during first operation. It is recommended to, 'run in', the oven before you cook. Run the oven at 180°C for two hours and ensure room is well ventilated.
	For products with separate – grill compartment, run the grill on for full for 15 minutes with grill door open.
	Persistent gas smell – do not operate appliance. Call service 131349
Condensation *NOTE:* some condensation is normal and is to be expected during cooking	Reduce the amount of water used for cooking
	Leave the door open after cooking if food remains in cooker for warming
Timer not audible	Turn Timer knob past 15 minute mark then to the required number of minutes
Oven shelf tight	Remove shelf and insert as per diagram
Oven or grill not working (Electric cooker only)	Clock not set, refer to clock instructions
Oven not working	Clock program set. Cancel program
Oven light not working	Lamp blown or loose in socket. Replace or tighten globe
Electronic clock flashing on display or off (Electric cooker only)	Check house hold power supply, fuses and reset time of the day
Powerpoints not working (NZ model Electric cooker only)	Check the fuse at rear and replace if blown
Gas oven burner uneven flame	This does not affect cooking results. From cold start the oven burner flame will be higher on the left-hand side. After reaching the set temperature, the flame will then be even.

TIPS AND INFORMATION

When you need information, service or replacements please quote:

1. Model Number.
2. Serial Number: You can find these on the data plate, which can be seen when the oven door is open. If you need more information, please contact the Customer Care Centre on 1300 363 640 (Australia – Centre is open 8.00am to 5.00pm Monday to Friday EST).

Or 09 573 2384 (New Zealand – Centre is open 8.00am to 5.00pm Monday to Friday).
Only authorised service centres should carry out servicing. Otherwise warranty may be void.
If you have a warranty or spare parts enquiry, you should call the numbers listed on the back page.

INSTALLATION

LOCATION

The appliance has been designed to fit a 550mm gap in kitchen cabinetry. Make sure the top of the hotplate is at least 10mm higher than the level of the bench top. The appliance must not be installed in a corner. It must be installed at least 100mm from the side wall.

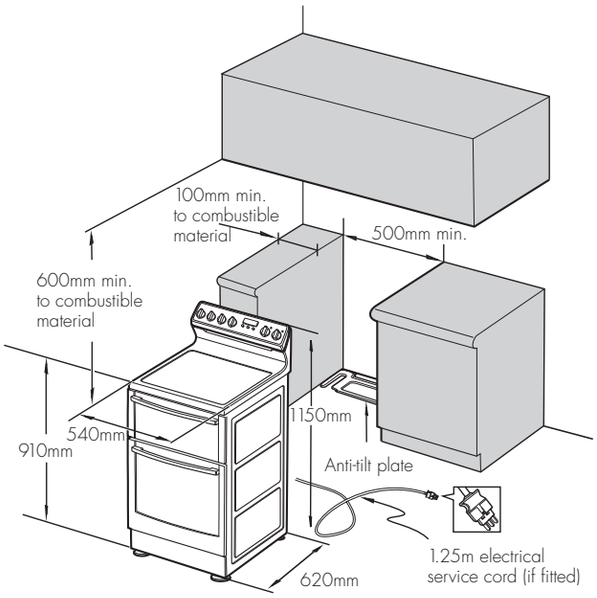

WARNING

In order to avoid accidental tipping of the appliance (for example, by a child climbing onto the open oven door), the anti tilt plate and stabilising bolt MUST be installed.

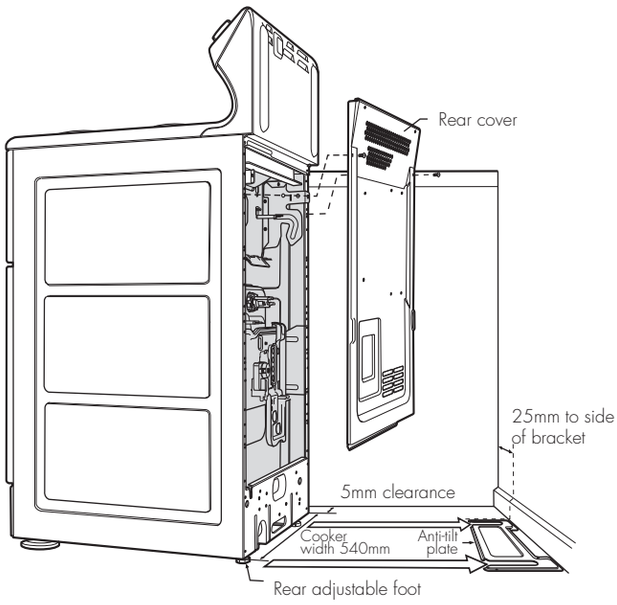

Position anti-tilt plate to the rear wall and 25mm from side of cupboard. Securely fix anti-tilt plate to the floor with fasteners. Adjust levelling feet on cooker as required.

STABILISING BOLT

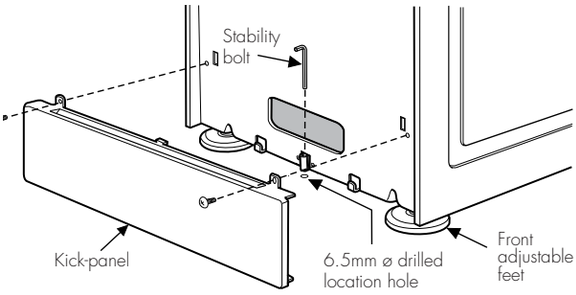

1. Remove oven door - to be done by qualified personnel only. (Refer to procedure).
2. Remove screws from kick panel. To remove kick panel lift kick panel upwards to release the two location tabs from the holes in the bottom of the panel.
3. Position cooker into the ant-tilt plate and then mark the position for the stability bolt hole on the floor.
4. Pull cooker out and drill the bolt hole, using a 6.5mm masonry or wood drill bit. The bolt hole needs to be a minimum of 30mm deep when fixing the oven to concrete.
5. Reposition cooker back into place and fit the stability bolt through the slot and into the drilled hole.
6. If the cooker is placed on a base, measures must be taken to prevent the appliance slipping from the base.

WARNING

For your safety this cooker is designed to be moved out of position by a qualified person only.

REPLACING THE OVEN LIGHT

⚠ WARNING

Ensure the appliance is switched off at power supply (not just the control knobs) before replacing the light globe to avoid possibility of electric shock.

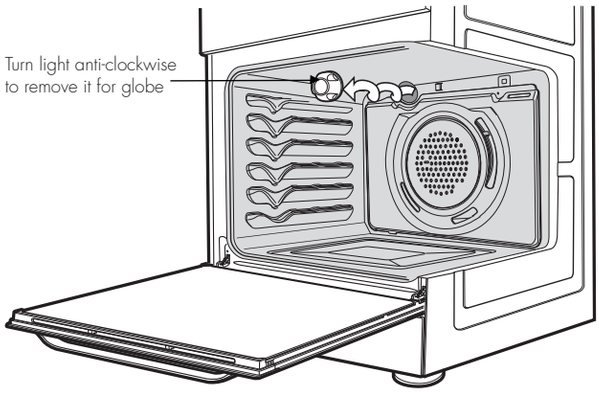

Globe Specifications:
25W (maximum)/230 - 240V
Temperature rating 300°C
Edison screw, small (E14)

INSTALLATION

REMOVING THE OVEN DOOR

(to be done by qualified personnel only)

1. With door fully open, rotate the two stirrups to its rest position.

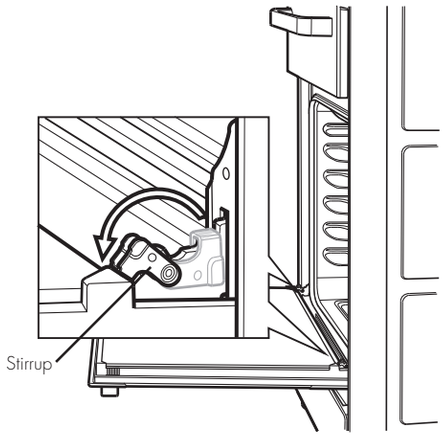

2. Close the door until it stops against the stirrups.

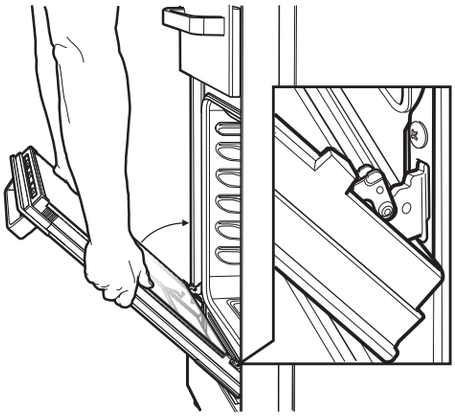

3. Close the door further.

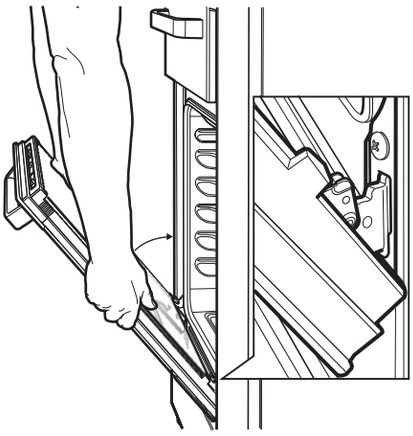

4. Lift the door slightly and evenly while continuing to slowly close the door.

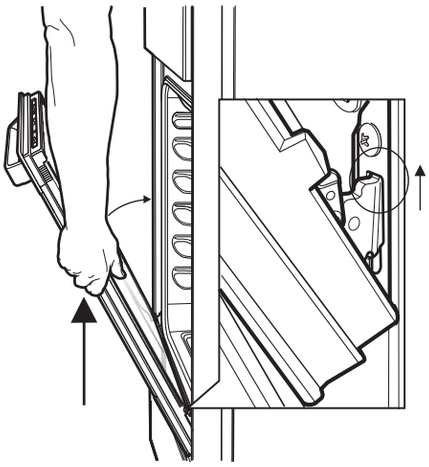

5. Remove the door by lowering gently and pull away from the frame of the oven. Care should be taken not to damage kick panel and other parts of the cooker.

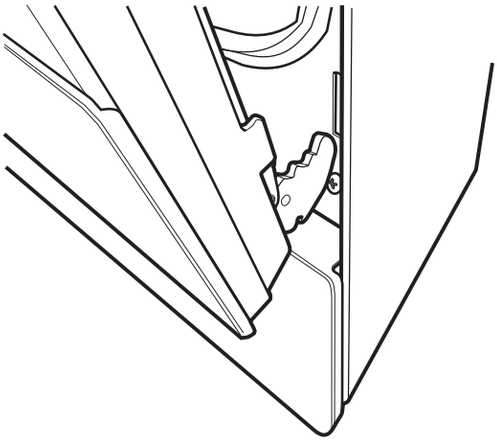

INSTALLATION

REPLACING THE OVEN DOOR

(to be done by qualified personnel only)

1. Hold door with both hands.
2. Locate both hinges into the frame slots at the same time.

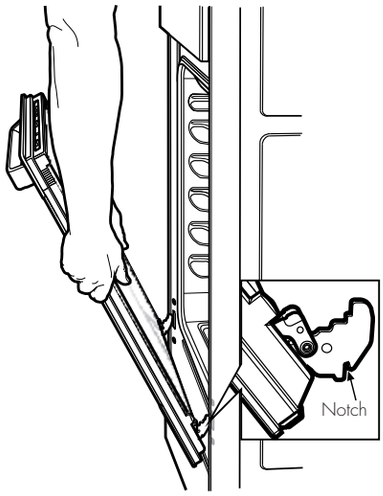

3. Ensure that the location notch drops into frame slot. Care should be taken not to damage other parts of the cooker.

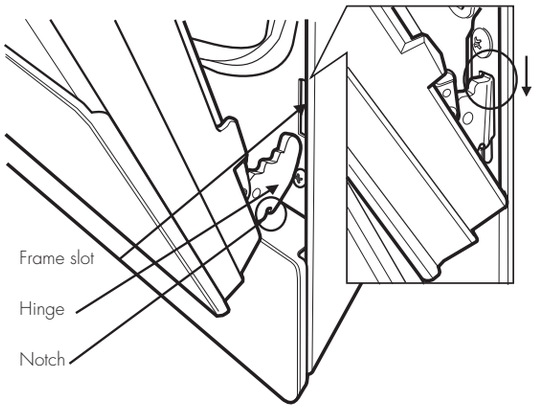

4. Open door fully and rotate stirrups away from you back to their original position.

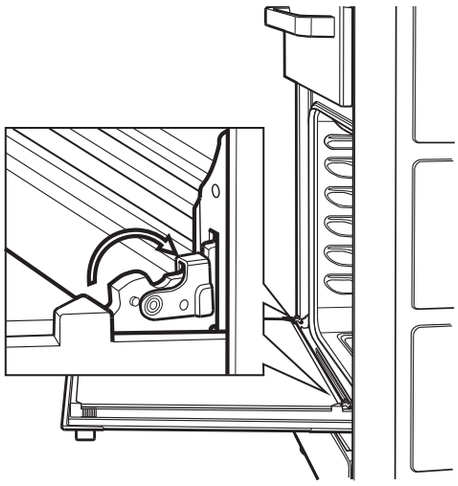

5. Close the door fully.

SERVICE FUSE LOCATION – MODELS WITH POWER POINT ONLY

This product is fitted with a power outlet at each end of the control panel.
The outlets are protected by a replaceable 15 amp fuse located at the rear of the product.

⚠ WARNING

Before servicing the fuse, ensure that all power to the product is switched off.

To access fuse, unscrew fuse housing and remove from appliance. (see diagram).

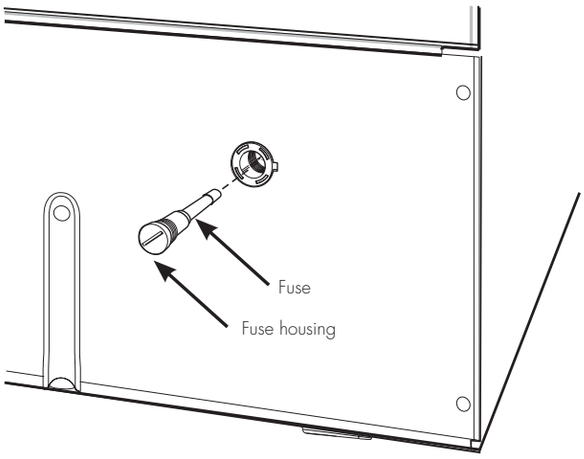

INSTALLATION

ELECTRIC WIRING REQUIREMENTS

The cooker MUST be installed in compliance with:

- Wiring connections in AS/NZS3000 wiring rules.
- Local regulations, municipal building codes and other statutory regulations.
- Data plate – Gives information about the rating and is located behind the bottom of the oven door.
- Circuit diagram – Is located on the back panel of the appliance.

For New Zealand only: The cooking range must be connected to the supply by a supply cord fitted with the appropriately rated plug that is compatible with the socket-outlet fitted to the final sub-circuit in the fixed wiring that is intended to supply this cooking range.

- A functional switch MUST be provided near the appliance in an accessible position (AS/NZS3000 – Clause 4.7.1).
- Wiring MUST be protected against mechanical failure (AS/NZS3000 – Clause 3.9).
- The cooker requires a means of all pole disconnection incorporated into the fixed wiring. This MUST have a disconnection gap of 3mm.
- The cooker MUST be properly earthed.
- When connections are made to a multiphase 230/240V supply, the bridge piece MUST be removed from between the active connections.
- If the supply cord is damaged, it must be replaced by the manufacturer, its service agent or similarly qualified persons in order to avoid a hazard.

IMPORTANT: Before you cook in your new oven it is important that the protective oils used in the manufacture of the product be removed. Refer to 'Before Operating your Appliance for the First Time' in the Using The Oven section.

HARD WIRING

1. Remove rear panel.
2. Fit wires through hole at bottom centre using the appropriate gland to protect insulation of wires from the hole edge. Note that the secondary insulation of the wires will probably need to be removed to fit through gland. If the conduit to appliance is required to bend due to rear wall an elbow may be required to achieve this.
3. Set the length of wiring from the gland to terminal block, ensuring length is sufficient but not excessive.
4. Make connections to terminals and engage wires into plastic clip. Cable tie as per diagram and secure plastic clip with two long screws supplied.
5. Replace rear cover.

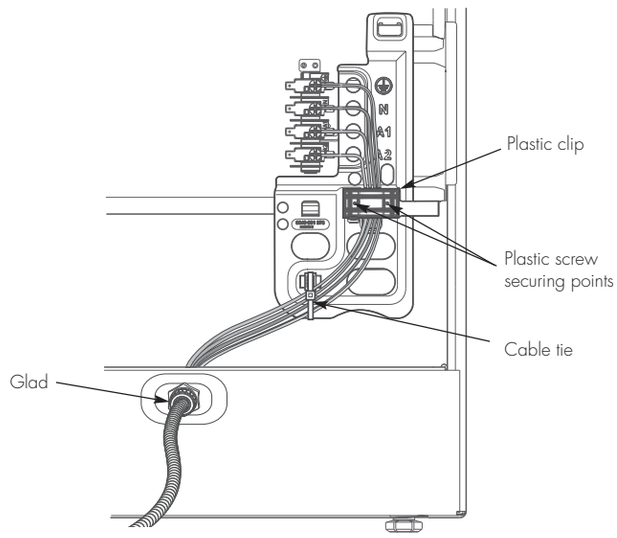

INSTALLATION

GAS REQUIREMENTS

This appliance must be installed by an authorised person, according to all codes and regulations of:

- AS/NZS 5601.1 (particular attention to clause 6.10.1 and figure 6.3 on page 97, and clause 6.10.1.11)
- Local gas fitting regulations, municipal building codes and other statutory regulations.

UNPACKING

When packaging is removed from product you will notice there are several items nested in the packaging base.

The burner crowns, burner caps and trivets can be fitted to the hob.

The regulator or test point fitting installation is described in the front of the manual with UNPACKING.

The cookers come in three gas types:
Natural gas, Propane and Universal LPG. If the cooker is required to use ULPG, a conversion kit can be obtained by contacting the Customer Care Centre for details. Before installation, check that the cooker is suitable for the gas supply by looking at the data plate behind the bottom of the oven door.

The following table shows the supply and operating pressures for various supplies.

GAS TYPE	NATURAL GAS	UNIVERSAL LPG	PROPANE
Supply pressure at inlet to appliance regulator (if fitted)	1.13 (kPa) Minimum	2.75* (kPa)	2.75* (kPa)
Operate pressure at appliance test point	1.00 (kPa)	2.75 (kPa)	2.75 (kPa)

*If the regulator is placed upstream of the cooker inlet, as is normal for cookers operating on LPG, then the supply pressure and operating pressure are the same.

The following table shows the injector sizes for each burner.

INJECTOR	NATURAL GAS	UNIVERSAL LPG	PROPANE
Low heat burner	1.00 mm	0.55 mm	0.62 mm
Medium heat burner	1.35 mm	0.70 mm	0.82 mm
High heat burner	1.60 mm	0.90 mm	0.95 mm
Intense heat wok burner	1.75 mm	1.00 mm	1.00 mm
Grill – main injector	1.50 mm	0.82 mm	0.82 mm
Oven – main injector	1.60 mm	0.82 mm	0.95 mm
Oven – bypass screw	0.73 mm	0.45 mm	0.45 mm

CHECKING PIPE SIZE

To work out a suitable pipe size for connection use the information in this table.

	NATURAL GAS			UNIVERSAL LPG			PROPANE		
Configuration	STD Hob	WOK Hob	Electric grill in oven	STD Hob	WOK Hob	Electric grill in oven	STD Hob	WOK Hob	Electric grill in oven
Hourly gas consumption for cooker	58.7MJ	60.4MJ	47.6MJ	45.9MJ	49.2MJ	36.9MJ	56.5MJ	58.3MJ	47.5MJ

Also use information about the length of the run, number of elbows, tees and bends, the available service pressure and the supply requirements. AS/NZS 5601.1 will help you with this matter.

OPERATION ON NG

- The appliance regulator MUST be orientated so that the pressure nipple is accessible.
- The arrow showing the direction of flow MUST be pointed correctly.
- The regulator has a ½" BSP internal thread at the inlet and outlet.

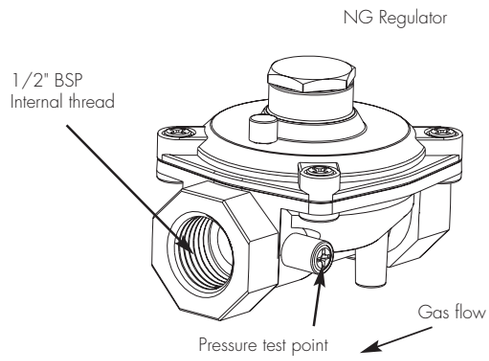

INSTALLATION

WIRING CONNECTION FOR GAS COOKER

To allow for disconnection of the appliance after installation, the plug must be accessible after installation.

If the supply cord is damaged, it must be replaced by the manufacturer, its service agent or similarly qualified persons in order to avoid a hazard.

GAS CONNECTION

Read these points before connecting to the gas supply:

- The cooker inlet connection point has a ½" BSP external thread. See diagram below.
- An NG regulator or a LPG test point fitting is supplied.
- It is recommended to fit the regulator or test point fitting to the appliance connection point, then fit either hard piping or a high level flexible connection (AS/NZS 5601.1 clauses 5.9 and 6.10.1.9) which is then attached to the consumer hard piping.
- Ensure installation allows withdrawal of appliance.

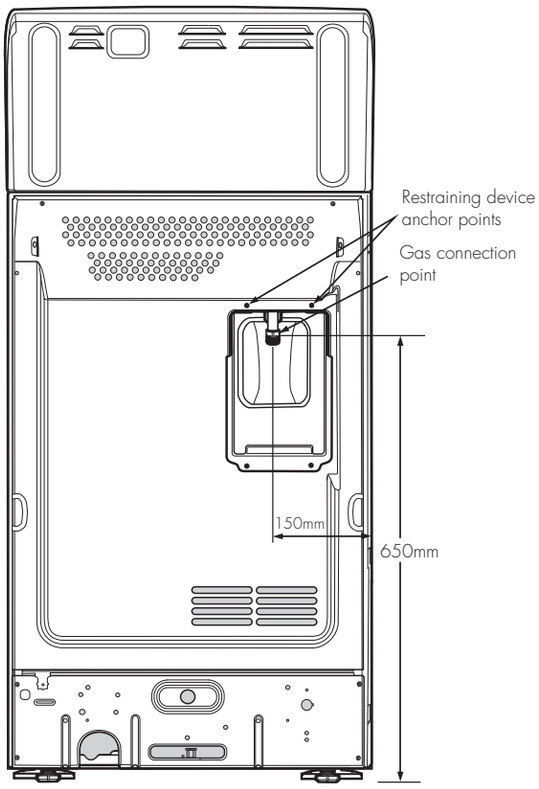

OPERATION ON UNIVERSAL LPG/PROPANE

1. The appliance inlet fitting provided MUST be orientated so that the pressure nipple is accessible.
2. The inlet fitting has ½" BSP internal thread at the inlet and outlet.

OPERATION ON SNG

- If the cooker is to be used with SNG, then the grill burner MUST be modified by the replacement of the shutter, which fits into the throat of the grill burner.
- A conversion kit can be obtained by contacting the Customer Care Centre.

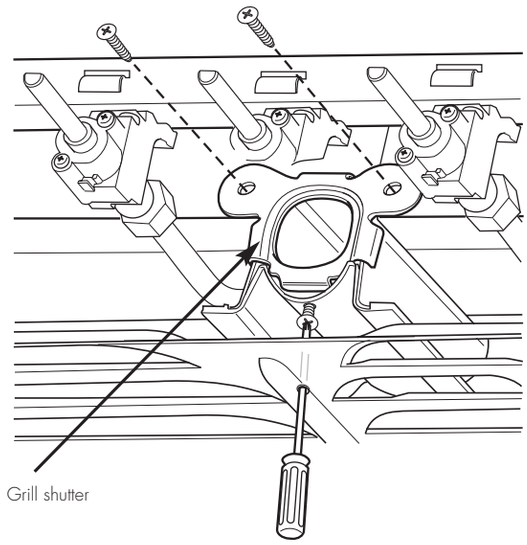

⚠ WARNING

Disconnect electric power before removing control panel.

1. Remove the control panel.
2. Remove the existing NG shutter securing screw (refer to diagram above) and slide upwards to disengage from grill burner.
3. Slide the SNG shutter into position and secure with screws.

TESTING THE GAS COOKER

⚠ WARNING

You MUST test the cooker after installation, before you hand it over to the customer.

You MUST have a manometer and a connecting tube.

INSTALLATION

CHECKING THE GAS SUPPLY

1. Check the manometer zero point is correct.
2. Connect the manometer to the cooker pressure test point. This is located on the regulator or LPG inlet fitting.
3. Turn on the gas supply and the electricity (if applicable) and try to ignite the gas.

NOTE: It will take additional time to light the gas for the first time, as air needs to be purged from the pipes.

4. Check the operating pressure for the particular gas type (see 'Gas Type' table).
   - For LPG cookers: Adjust the regulator if necessary (this may be remote from the cooker).
   - For Natural Gas cookers: Regulators are supplied pre-adjusted and configured by the component maker for use with Natural Gas. The appliance installer is not required to make an adjustment to obtain the correct outlet pressure setting. An arrow on the base of the regulator indicates the direction of the gas flow when the inlet and outlet of the regulator are orientated correctly.
5. When the regulator has been fitted check for leaks from the connections with soapy water.

CHECKING REGULATOR FUNCTION

With the appliance operating, check the outlet pressure:

1. When all the burners of the appliance are operating at maximum.
2. When the smallest burner of the appliance is operating at minimum.

   Under both these conditions the outlet pressure should not vary from nominal operating pressure of 1.0kPa by more then ± 20% (ie ±0.20kPa for Natural Gas).

If the regulator does not appear to be performing satisfactorily then check the following points:

1. If the outlet pressure is consistently too low then.
   - the inlet pressure may be too low and adjustment of an upstream regulator may be needed, or
   - an upstream regulator or valve with insufficient flow capacity may be present in the gas supply line. It may be necessary to repeat the checks whilst measuring both the inlet and outlet pressure to determine if the inlet pressure is in the range 1.13-5kPa.
2. Check that the regulator has been fitted to the gas supply line in the correct orientation.
3. Replace the regulator if it fails to perform after the checks.

TESTING BURNER PERFORMANCE

- Observe the flame appearance on each burner when set to max. If it is smaller or larger than expected, then the injector size needs checking (refer to table).
- When maximum flame appearance is correct, check the turn down setting on each burner. If incorrect, proceed as follows:

⚠ WARNING

Disconnect electric power.

1. Remove the control panel and adjust the bypass screw when valve is set to maximum. The screw is mounted on the body of each hotplate control valve.
2. Check the ignition on all burners both separately and in combination.
3. Check the operation of the electrical components, if applicable.
4. When operating correctly, show customer how to use the cooker.
5. If not operating correctly, advise the customer to ring Electrolux Customer Service Centre. Place a warning sign on cooker or if dangerous, disconnect cooker.

NOTES

NOTES

NOTES

Electrolux Warranty

FOR SALES IN AUSTRALIA AND NEW ZEALAND
APPLIANCE: BUILT-IN OVEN, COOKTOP
AND UPRIGHT RANGE COOKER

This document sets out the terms and conditions of the product warranties for Electrolux Appliances. It is an important document. Please keep it with your proof of purchase documents in a safe place for future reference should you require service for your Appliance.

1. In this warranty
   (a) 'acceptable quality' as referred to in clause 10 of this warranty has the same meaning referred to in the ACL;
   (b) 'ACL' means Trade Practices Amendment (Australian Consumer Law) Act (No.2) 2010;
   (c) 'Appliance' means any Electrolux product purchased by you accompanied by this document;
   (d) 'ASC' means Electrolux' authorised serviced centres;
   (e) 'Electrolux' means Electrolux Home Products Pty Ltd of 163 O'Riordan Street, Mascot, NSW 2020, ABN 51 004 762 341 in respect of Appliances purchased in Australia and Electrolux (NZ) Limited of 3-5 Niall Burgess Road, Mount Wellington, in respect of Appliances purchased in New Zealand;
   (f) 'major failure' as referred to in clause 10 of this warranty has the same meaning referred to in the ACL and includes a situation when an Appliance cannot be repaired or it is uneconomic for Electrolux, at its discretion, to repair an Appliance during the Warranty Period;
   (g) 'Warranty Period' means:
      (i) where the Appliance is used for personal, domestic or household use (i.e. normal single family use) as set out in the instruction manual, the Appliance is warranted against manufacturing defects in Australia for 24 months and in New Zealand for 24 months, following the date of original purchase of the Appliance;
      (ii) where the Appliance is used for commercial purposes (including being used to directly assist a business or where the Appliance is used in a multi-family communal or share type environment), the Appliance will then be warranted against manufacturing defects in Australia for 3 months and in New Zealand for 3 months, following the date of original purchase of the Appliance.
   (h) 'you' means the purchaser of the Appliance not having purchased the Appliance for re-sale, and 'your' has a corresponding meaning.
2. This warranty only applies to Appliances purchased and used in Australia or New Zealand and is in addition to (and does not exclude, restrict, or modify in any way) any non-excludable statutory warranties in Australia or New Zealand.
3. During the Warranty Period Electrolux or its ASC will, at no extra charge if your Appliance is readily accessible for service, without special equipment and subject to these terms and conditions, repair or replace any parts which it considers to be defective. Electrolux or its ASC may use remanufactured parts to repair your Appliance. You agree that any replaced Appliances or parts become the property of Electrolux. This warranty does not apply to light globes, batteries, filters or similar perishable parts.
4. Parts and Appliances not supplied by Electrolux are not covered by this warranty.
5. You will bear the cost of transportation, travel and delivery of the Appliance to and from Electrolux or its ASC. If you reside outside of the service area, you will bear the cost of:
   (a) travel of an authorised representative;
   (b) transportation and delivery of the Appliance to and from Electrolux or its ASC,

   In all instances, unless the Appliance is transported by Electrolux or an Electrolux authorised representative, the Appliance is transported at the owner's cost and risk while in transit to and from Electrolux or its ASC.
6. Proof of purchase is required before you can make a claim under this warranty.
7. You may not make a claim under this warranty unless the defect claimed is due to faulty or defective parts or workmanship. Electrolux is not liable in the following situations (which are not exhaustive):
   (a) the Appliance is damaged by:
      (i) accident
      (ii) misuse or abuse, including failure to properly maintain or service
      (iii) normal wear and tear
      (iv) power surges, electrical storm damage or incorrect power supply
      (v) incomplete or improper installation
      (vi) incorrect, improper or inappropriate operation
      (vii) insect or vermin infestation
      (viii) failure to comply with any additional instructions supplied with the Appliance;
   (b) the Appliance is modified without authority from Electrolux in writing;
   (c) the Appliance's serial number or warranty seal has been removed or defaced;
   (d) the Appliance was serviced or repaired by anyone other than Electrolux, an authorised repairer or ASC.
8. This warranty, the contract to which it relates and the relationship between you and Electrolux are governed by the law applicable where the Appliance was purchased. Where the Appliance was purchased in New Zealand for business purposes the Consumer Guarantee Act does not apply.
9. To the extent permitted by law, Electrolux excludes all warranties and liabilities (other than as contained in this document) including liability for any loss or damage whether direct or indirect arising from your purchase, use or non use of the Appliance.
10. For Appliances and services provided by Electrolux in Australia, the Appliances come with a guarantee by Electrolux that cannot be excluded under the Australian Consumer Law. You are entitled to a replacement or refund for a major failure and for compensation for any other reasonably foreseeable loss or damage. You are also entitled to have the Appliance repaired or replaced if the Appliance fails to be of acceptable quality and the failure does not amount to a major failure. The benefits to you given by this warranty are in addition to your other rights and remedies under a law in relation to the Appliances or services to which the warranty relates.
11. At all times during the Warranty Period, Electrolux shall, at its discretion, determine whether repair, replacement or refund will apply if an Appliance has a valid warranty claim applicable to it.
12. For Appliances and services provided by Electrolux in New Zealand, the Appliances come with a guarantee by Electrolux pursuant to the provisions of the Consumer Guarantees Act, the Sale of Goods Act and the Fair Trading Act.
13. To enquire about claiming under this warranty, please follow these steps:
   (a) carefully check the operating instructions, user manual and the terms of this warranty;
   (b) have the model and serial number of the Appliance available;
   (c) have the proof of purchase (eg an invoice) available;
   (d) telephone the numbers shown below.
14. You accept that if you make a warranty claim, Electrolux and its ASC may exchange information in relation to you to enable Electrolux to meet its obligations under this warranty.

Important Notice

Before calling for service, please ensure that the steps listed in point 13 above have been followed.

FOR SERVICE or to find the address of your nearest state service centre in Australia **PLEASE CALL 13 13 49** For the cost of a local call (Australia only)	**SERVICE AUSTRALIA** Electrolux ELECTROLUX HOME PRODUCTS www.electrolux.com.au	**FOR SPARE PARTS** or to find the address of your nearest state spare parts centre in Australia **PLEASE CALL 13 13 50** For the cost of a local call (Australia only)

FOR SERVICE or to find the address of your nearest authorised service centre in New Zealand **FREE CALL 0800 10 66 10** (New Zealand only)	**SERVICE NEW ZEALAND** Electrolux ELECTROLUX HOME PRODUCTS www.electrolux.co.nz	**FOR SPARE PARTS** or to find the address of your nearest state spare parts centre in New Zealand **FREE CALL 0800 10 66 20** (New Zealand only)

GOV_Warr_Apr11

For more information on all Westinghouse appliances, or for dimension and installation information, call into your retailer, phone or email our customer care team or visit our website:

AUSTRALIA
phone: 1300 363 640
fax: 1800 350 067
email: customercare@electrolux.com.au
web: www.westinghouse.com.au

NEW ZEALAND
phone: 09 573 2384
fax: 0800 363 600
email: customercare@electrolux.co.nz
web: www.westinghouse.co.nz

Electrolux
TOP SERVICE

TOP SERVICE
Top Service encompasses the after sales service provided by The Electrolux Group to consumers including delivery, home service and spare parts.

Westinghouse. We are part of the Electrolux family.
Share more of our thinking at www.electrolux.com

P/No: 0342 001 583 13A001A
© 2013 Electrolux Home Products Pty Ltd.
ABN 51 004 762 341
WMAN_540UM_Mar13